International Journal of Advanced Technology and Innovative Research

www.ijatir.org

ISSN 2348–2370
Vol.10,Issue.06,
June-2018,
Pages:0713-0715

An Advanced Garbage Monitoring System using Internet of Things

M. SUHASINI[1], M. MANI DEEPIKA[2], J. SAI SRAVANI[3]

[1]Assistant Professor, Dept of ECE, Geethanjali Institute of Science and Technology, Nellore, AP, India.
[2]Graduate Scholar, Dept of ECE, Geethanjali Institute of Science and Technology, Nellore, AP, India.
[3]Graduate Scholar, Dept of ECE, Geethanjali Institute of Science and Technology, Nellore, AP, India.

Abstract: The Project aims at integrating embedded technology for smart cities. It focuses on enhancing the transportation system of trash containers, to be utilized in Smart cities. The prototype can be realized using Global system for mobile (GSM), Ultrasonic Sensor and Wi-Fi .garbage Containers with this feature can share information. For realizing this with a miniature demo, ultrasonic sensors are used for sensing level of garbage. GSM and Wi-Fi system used to share the condition of the Trash Containers. Smart Trash-Containers will help in-time removal of garbage from respective locations.

Keywords: Global System For Mobile (GSM), Ultrasonic Sensor and Wi-Fi.

I. INTRODUCTION

The world is in a stage of up gradation, there is one stinking problem. we have to deal with. Garbage! In our daily life, we see the pictures of garbage bins being overfull and all the garbage spills out. This leads to the number of diseases as large number of insects and mosquitoes breed on it. A big challenge in the urban cities is solid waste management not only in India but for most of the countries in the world. Hence, such a system has to be build which can eradicate this problem or at least reduce it to the minimum level. The project gives us one of the most efficient ways to keep our environment clean and green. The smart city concept is still new in India, although it has received a lot of attention in few years when our present prime minister gave the idea of building 100 smart cities throughout India. Now, with the upcoming large number of smart cities, large numbers of responsibilities are also required to be fulfilled. The prime need of a smart lifestyle begins with cleanliness and cleanliness begins with dustbin. A society will get its waste dispatched properly only if the dustbins are placed well and collected well. The main problem in the current waste management system in most of the Indian cities is the unhealthy status of dustbins. In this project we have tried to upgrade the trivial but vital component of the urban waste management system, i.e. dustbin.

Now with the rise of technology it is high time that we should use technology for waste management systems. So, in this project we have integrated analytics and electronics in order to create optimal changes in the conventional methodology of waste collection with the large amount of data that is being produced by the smart bin networks. The movement of waste across the whole city can be tracked and thus can be monitored by a single system efficiently and concretely. This system can prove to be a revolution for the whole urban waste management system of upcoming smart cities. Public garbage cans detract from the surrounding environment when they are full for long periods of time. On the other hand, it can be an expensive operation to send garbage trucks to every garbage can in the city; if cans are empty, the journey accomplishes nothing. Cities develop rough algorithms for minimizing cost of various municipal services such as collecting garbage, but it can improve these services by notifying relevant public works officials when particular garbage cans are full.

II. EXISTING METHOD

Garbage Containers with this feature can share information of the respective location, weight and height with the authorized department. At present no system is available as a whole to perform the task of removing the garbage of the system and to monitor the function of the system. To perform this, we go for the innovative method that removes the garbage and monitors the status of the system.

III. PROPOSED METHOD

Smart Garbage-Containers will help in-time removal of garbage from respective locations. The system, (to be integrated with traditional Containers) will monitor the status of container in terms of height of the garbage. Once if the container is filled, respective department will get message with status. As we know, the large bins are present in each locality and serve as the centre point of garbage of that particular locality. The garbage collection team collects the garbage from these central bins in their trucks. Our model of hardware is going to be applied in these central bins and thus making them smart bins. For this we have divided the dustbin into three different levels according to the level of garbage filled. Accordingly, the text messages indicating the levels are being sent to the central office, which acts as a data warehouse for all the level data being sent by the different bins. The central office of waste management department now will be able to track the level of every dustbin getting filled up just by sitting in their office at real time.

Copyright @ 2018 IJATIR. All rights reserved.

ADVANTAGES:

- Avoid health hazards.
- Reduce the time.
- Reduce the investment.
- Keep the home cleaner.
- Remove the garbage in time.
- Reduce the man power.
- Proper maintenance for smart cities.

Applications:

- City municipal corporation.
- Smart cities.
- Industries.
- Hospitals.

IV. SYSTEM ARCHITECTURE

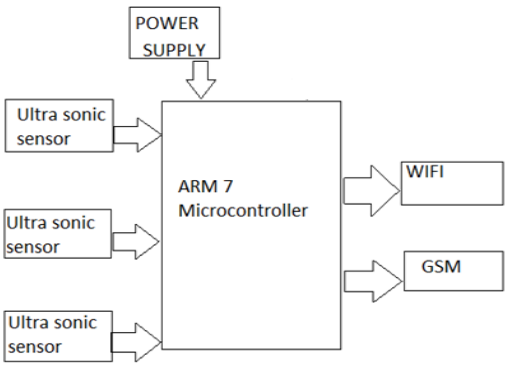

Fig.1. Block Diagram

Fig.2.GSM Modem.

A. Hardware Components

- ARM 7 Microcontroller
- Ultra sonic Sensors
- Wi-Fi Module
- GSM Module
- Power Supply circuit

Arm7 Microcontroller: 16/32-bit ARM7 microcontroller in a 64 pin package. 16 KB on-chip Static RAM. 128/256 KB on-chip Flash Program Memory as shown in Fig.1. 10-bit A/D converter with conversion time as low as2.44 ms. Two 32-bit timers, PWM unit (6 channels) Real Time Clock and Watchdog.

GSM Modem: GSM modem shown in figure.2 is used to send message to the garbage depots if the Garbage Can exceeds the set threshold level as shown in Fig.2. With the help of GSM module interfaced, we can send short text messages to the required municipal office. GSM module is provided by sim using the mobile service provider and send sms to the respective authorities as per programmed. It operates at either the 900 MHz or 1800 MHz frequency band.

WIFI Module: This unit is authoritative enough onboard processing and storage capability that allows it to be integrated with the sensors and other application explicit devices through its GPIOs with minimal development upfront and minimal loading during runtime as shown in Fig.3. Its high degree of on-chip integration allows for minimal external circuitry, including the frontend module, is designed to occupy minimal PCB area. The ESP8266 provisions APSD for VoIP claims and Bluetooth co-existence confines, it comprises a self-calibrated RF leasing it to vocation beneath all operational conditions, and involves no peripheral RF parts. There is an approximately immeasurable spray of in sequence accessible for the ESP8266, all of which has been provided by amazing community support. The properties using the ESP8266, even instructions on how to renovate this module into an IoT (Internet of Things) solution is elaborated. ESP8266 Module is not capable of 5-3V logic shifting and will entail an external Logic Level Converter. Note: Do not power directly from 5V dev. Board

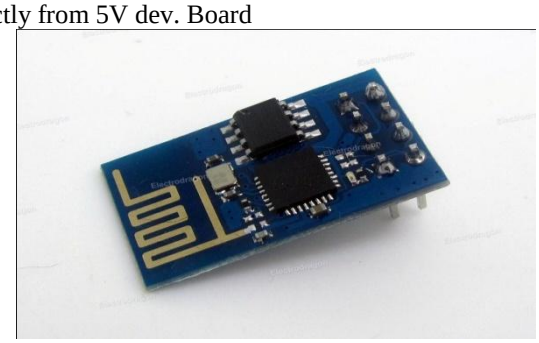

Fig.3.WIFI Module.

Ultrasonic Sensor: An Ultrasonic sensor is a device that can measure the distance to an object by using sound waves. It measures distance by sending out a sound wave at a specific frequency and listening for that sound wave to bounce back as shown in Fig.4. By recording the elapsed time between the sound wave being generated and the sound wave bouncing back, it is possible to calculate the distance between the sensor and the object.

Fig.4. Ultrasonic sensor.

V. RESULT AND ANALYSIS

The result shows the developed system is useful for removing the garbage and monitoring the status of the system successfully as shown in Fig.5.

- The central office of waste management department now will be able to track the level of every dustbin getting filled up just by sitting in their office at real time.
- This information will now guide them efficiently to take up the action of sending the trucks to empty the dustbin whose levels are significant.

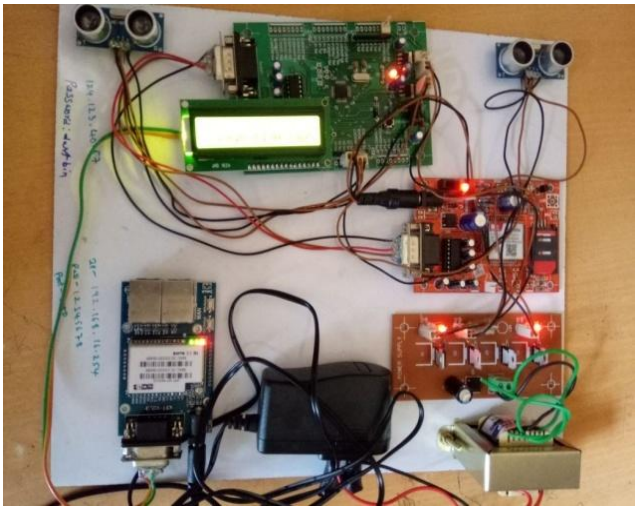

Fig.5. Snapshot of the project kit.

VI. CONCLUSION

The movement of waste across the whole city can be tracked and thus can be monitored by a single system efficiently and concretely. This system can prove to be a revolution for the whole urban waste management system of upcoming smart cities.

Future Scope: We present a working proof of concept for that can sense garbage level and notify necessary city workers over the cloud. Ultrasonic distance readings are a reasonably reliable way to gather this data, though they are inconsistent when faced with complex surfaces. With our cost and power analyses, we also determine that this system can be made much cheaper and more power efficient. Further field trials would be useful to better assess the reliability of the distance sensor and in turn improve the SMS alerting algorithm. With data from multiple sensors, a possible feature for the application server is the calculation of an optimized and human-readable route that truck drivers can utilize to efficiently collect full garbage cans.

VII. REFERENCES

[1]http://www.instructables.com/id/Smart-Garbage-Can-for-a-Smart-City/

[2]http://www.bioenabletech.com/smart-bins-for-smart-city.html

[3]http://www.govtech.com/civic/Smart-Garbage-Startup-Cuts-City-Garbage-Costs

[4]http://www.postscapes.com/smart-garbage/

[5]Michael Alexander, John Walkenbach, “Microsoft Excel Dashboards & Reports”, Wiley; Second edition, 28 June 2013. (Book style)

[6]Yann Glouche, Paul Couderc. A Smart Waste Management with Self-Describing objects. Leister, Wolfgang and Jeung, Hoyoung and Koskelainen,Petri. The Second International Conference on Smart Systems,Devices and Technologies (SMART’13), Jun 2013, Rome, Italy.

[7] Foday Pinka Sankoh, Xiangbin Yan, Quangyen Tran on “Environmental and Health Impact of Solid Waste Disposal in Developing Cities: A CaseStudy of Granville Brook Dumpsite, Freetown, SierraLeone,” on Journal of Environmental Protection, 2013, 4, 665-670.(Journal or magazine citation)

[8] Michael Batty , Kay Axhausen, et al., “Smart Cities of the Future,” UCL centre for advanced spatial analysis on working paper series, ISSN 1467-1298, Paper 188 - Oct 12. http://guidetodatamining.com.